PerMet 2.0
5x12 Signal Press-in
According to IEC 61076-4-104

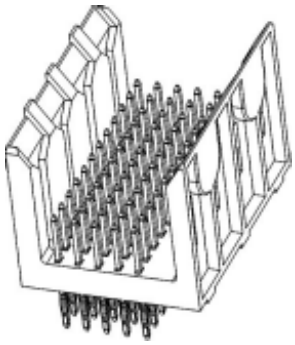

- Designed according to the standard IEC 61076-4-104
- Standard press-in assembly method possible
- High contact density with 2 mm grid spacing

PRODUCT DATA

Electric data	
Current rating	1 A max / contact
Test voltage	1000 V AC (rms)
Insulation resistance	5 Gohm (min)
Temperature range	-55…+125 ° C

Materials	
Housing material	Thermoplastic resin, glass-fibre filled, UL 94 V-0
Contact material	Copper alloy
Contact plating	Nickel all over + Hard Gold MIL-G-45204B Type II
Press-in zone plating	Tinlead over nickel
Physical data	
Retention Force	10 N min / press-in pin
Insertion Force	50 N max / press-in pin

PCB data	$0{,}7\ ^{+0.07}_{-0.05}$ mm
Recommended PCB hole platings	Cu 25-50 um, Sn or SnPb < 10 µm
PCB Thickness	1.6 – 2.4 mm

PERLOS CORPORATION ■ P.O. Box 405 ■ FIN-80101 Joensuu ■ Finland
■ Tel. +358-13-261 2001 ■ Fax +358-13-261 3600 ■ www.perlos.com
■ e-mail: sales.connectors@perlos.com

UL Approved

PERLOS

PerMet 2.0 5x12 Signal Press-in

Identification	Number of contacts	Part number	
PerMet 2.0 5x12 Signal Press-in	060	HM1-S060-MS4-P1*573	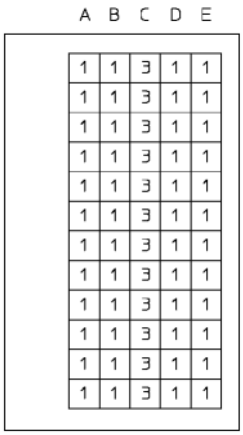
PerMet 2.0 5x12 Signal Press-in	060	HM1-S060-MS4-P1*575	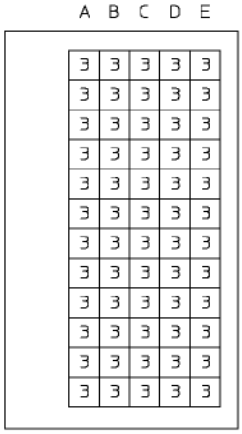
PerMet 2.0 5x12 Signal Press-in	060	HM1-S060-MS4-P1*582	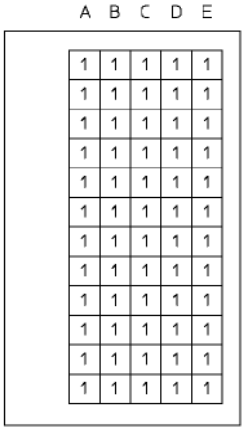

Pin Number	1	2	3	4	5
Contact Lenght (mm)	5,00	5,75	6,50	7,25	8,00
Termination Lenght (mm)	4,25	4,25	4,25	4,25	4,25

PERLOS CORPORATION ■ P.O. Box 405 ■ FIN-80101 Joensuu ■ Finland
■ Tel. +358-13-261 2001 ■ Fax +358-13-261 3600 ■ www.perlos.com
■ e-mail: sales.connectors@perlos.com

UL Approved

PerMet 2.0 5x12 Signal Press-in

Dimensions

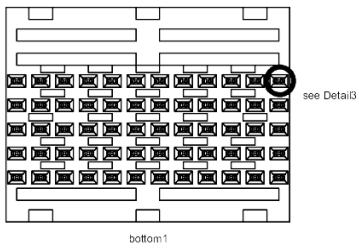

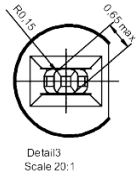

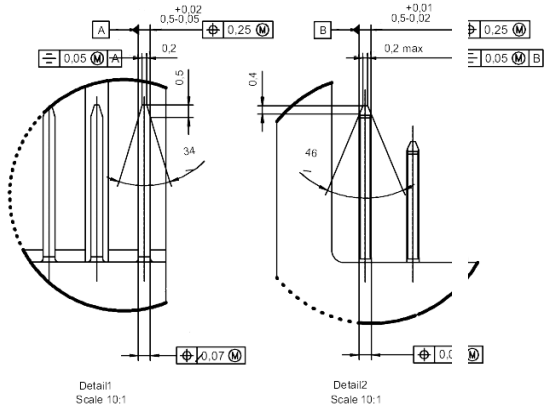

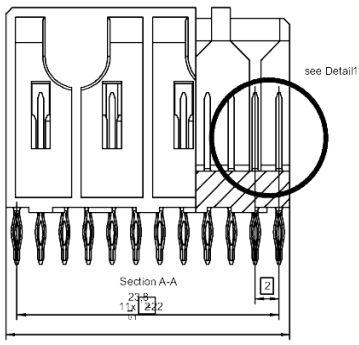

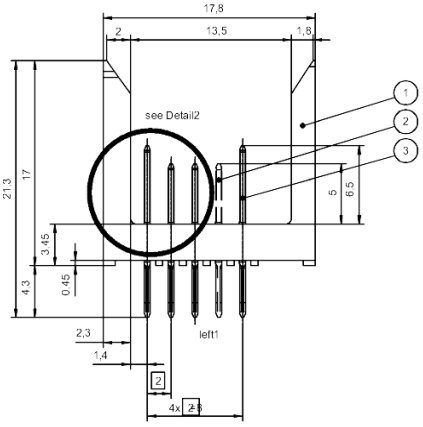

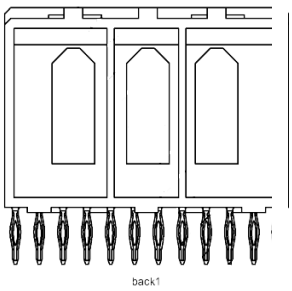

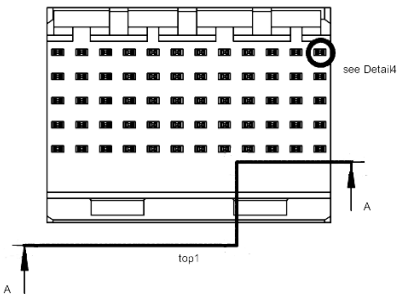

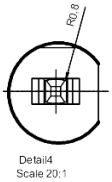

Recommended PCB layout

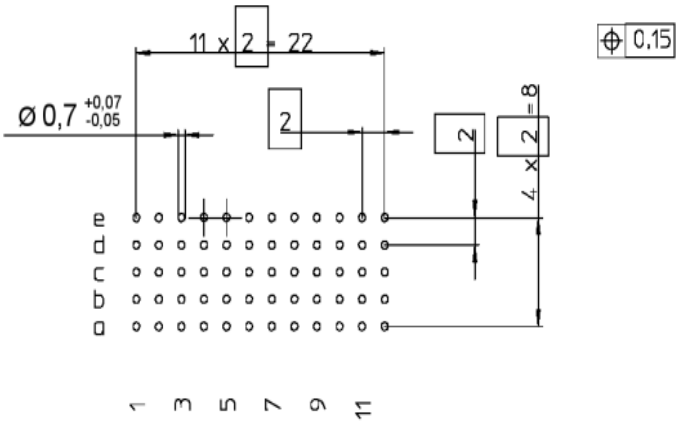

PERLOS CORPORATION ■ P.O. Box 405 ■ FIN-80101 Joensuu ■ Finland
■ Tel. +358-13-261 2001 ■ Fax +358-13-261 3600 ■ www.perlos.com
■ e-mail: sales.connectors@perlos.com